2WPSVAC

Vacuum Pressure Switch

- **Ranges from 5 to 30 IN/HG and -30/0/30 IN/HG**
- **Rugged NEMA 4X, 12 & 13 Housing**
- **One or Two SPDT Contacts**
- **Various Wetted Materials Available**

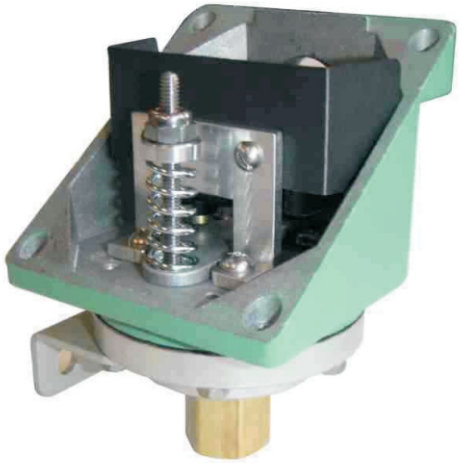

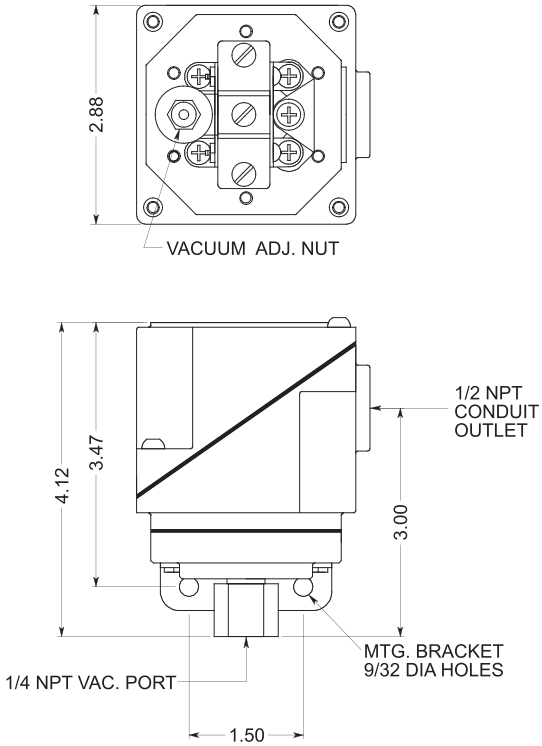

GENERAL DESCRIPTION

The 2WPS employs Winters unique, rugged, and sensitive switching mechanism. Unlike most "inline" vacuum switch designs, the Solon mechanism is frictionless and amplifies the movement of the sensing element. This results in improved life, repeatability, and lower deadbands. The 2PS mechanism can be supplied with one S.P.D.T. electric switch or two S.P.D.T. electric switches that are independently adjustable. The unit can be supplied with no housing, or enclosed in a rugged die cast NEMA 4X, 12 and 13 housing. With the cover of the enclosure removed, the terminals of the electric switch(es), and the vacuum adjustment(s) are exposed for easy wiring and adjustment of the vacuum setting. The die cast cover is equipped with captive stainless steel screws that retain the cover gasket when the cover is removed. Other useful options can easily be specified with this model. See the Special Features section on page 2 for special wetted materials and options for particular applications.

OTHER 2PS MODELS ARE AVAILABLE

The modular design of sensing elements used in the 2PS series switches allows a variety of models for different applications. These applications include High Pressure, Low Pressure and Differential Pressure models using diaphragms, bellows, and pistons for actuation. See individual information sheets describing these models.

SPECIFICATIONS

PHYSICAL DATA (Standard)
-see page 2 for special features

Maximum Ambient Temperature: 180˚F
Minimum Ambient Temperature: -20˚F
Vacuum Connection: NPT
Electrical Connection: 1/2 NPT
Housing: Diecast Aluminum - Painted per ASTM B117
Deadband: Fixed
Sensitivity: 1/2% of range (for one SPDT switch)
Drift: <1% of range (100,000 operations)
Weight: Approx. 1.5 lbs.
Contact Ratings: 15A - 125, 250, 480 VAC
Port Fitting Material: Brass
Trim Material: Anodized Aluminum
Diaphragm Material: Buna N
Set Point Adjustment: Screw type, field adjustable
No. Contacts: One or Two S.P.D.T.
Contact Listings: UL Recognized, CSA Certified

LISTED

Underwriters Laboratories, Inc. Listed:
Industrial Controls Equipment Type 4 & 12, File E130423,
Pressure Operated Switch for Hazardous Locations,
Class I, Groups C & D; Class II, Groups E, F, & G File E65371.

Canadian Standards Association Certified:
Industrial Control Equipment Type 4 & 12, LR88975.
Switches Pressure Type for Hazardous Locations,
Class I, Groups C & D; Class II, Groups E, F & G, LR88975.

ORDERING A SWITCH

MODEL SERIES 2WPS
Vacuum Switch
Diaphragm Sensing Element

1. SPECIFY A MODEL NUMBER

2WPS W 1 SS 2

MODEL SERIES

HOUSING
- **"-"** - NO HOUSING
- **W** - WATERTIGHT - NEMA 4X,12 & 13

NUMBER OF ELECTRIC SWITCHES
- **1** - ONE S.P.D.T.
- **2** - TWO S.P.D.T. - (SWITCH TYPE "5" ONLY)

SPECIAL FEATURES
- **M** - 1/2 NPT MALE PIPE MOUNTING
- **Q** - DOUBLE SNAP ACTING BELLEVILLE SPRING - TO PROVIDE POSITIVE SETPOINT ACCURACY IN HIGH VIBRATION APPLICATIONS
- **SS** - STAINLESS STEEL WETTED TRIM MATERIAL
- **SN** - BRASS WETTED TRIM MATERIAL
- **U** - ADDITIONAL PAINTING AFTER ASSEMBLY
- **V** - HIGH TEMPERATURE SERVICE - INCREASED FROM 180°F TO 250°F AMBIENT
- **Z** - VITON DIAPHRAGM MATERIAL

TYPE OF ELECTRIC SWITCHES
- **1** - LOW DEADBAND
  15A - 125, 250, 480 VAC
- **2** - STANDARD DEADBAND
  15A - 125, 250, 480 VAC; 0.5A - 125 VDC
- **3** - HIGH DC RATED (MAGNETIC BLOWOUT)
  10A - 125 VDC; 3A - 250 VDC
- **5** - SUB MINIATURE SWITCH - 2 S.P.D.T.
  5A - 125, 250 VAC; 0.5A - 125 VDC
- **6** - GOLD CONTACT -
  1 A - 125 VAC

* SPECIAL FEATURES SUCH AS STAINLESS TAGGING, OR SPECIAL WETTED PARTS; TEFLON, PVC, KYNAR, KALREZ, HASTELLOY, ETC. ARE AVAILABLE ON REQUEST. CONSULT FACTORY FOR CAPABILITES AND PRICING FOR ANY FEATURES NOT SHOWN.

2. SPECIFY A RANGE

ADJUSTABLE VACUUM RANGE	MAXIMUM DEADBAND TYPE "2"	MAXIMUM DEADBAND TYPE "5"	MAX. WORKING PRESSURE
0-5 IN/HG	0.53 HG	N/A	20 PSI
0-15 IN/HG	0.67 HG	N/A	20 PSI
0-30 IN/HG	0.90 HG	2.0 HG	20 PSI
-30/0/30IN/HG	1.4 HG	N/A	20P SI

DEADBAND NOTES

The deadbands listed in the tables are the maximum switch differentials when the standard (Type “2” or Type “5”) electric switch is used.
Deadband is affected by the type of electric switch used. Each type of electric switch's effect on deadband is as follows:

Type "1" - *Low Deadband* - Use ½ TYPE 2 table values.

Type "2" - *Std. Deadband* - Use TYPE 2 table values.

Type "3" - *High DC Rated* - Multiply TYPE 2 table values by two.

Type "5" - *Sub Miniature* - 2 S.P.D.T. - Use TYPE 5 table values.

Type "6" - *Gold Contact* - Use TYPE 2 table values.

INSTALLATION NOTES

Orientation - The 2WPSVAC will operate satisfactorily in any position, however, mounting the device vertically will allow the easiest adjustability and reduce sediment in the vacuum chamber.
Wiring - Switches may be wired to 'normally open' or 'normally closed' terminals on electric switch(es). Single switch units have screw terminals while dual switch versions use a screw terminal block.
Vacuum Connection - 1/4 NPT female is standard. 1/2 NPT male is available ("M" option).
Adjustment - Turn vacuum adjustment nut(s) counterclockwise to increase setpoint. Detailed installation & calibration instructions are provided for every shipment. Factory setting is available at no charge.
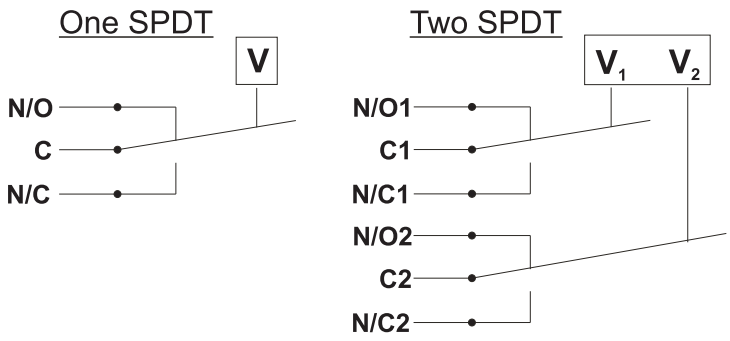
Wiring Schematic